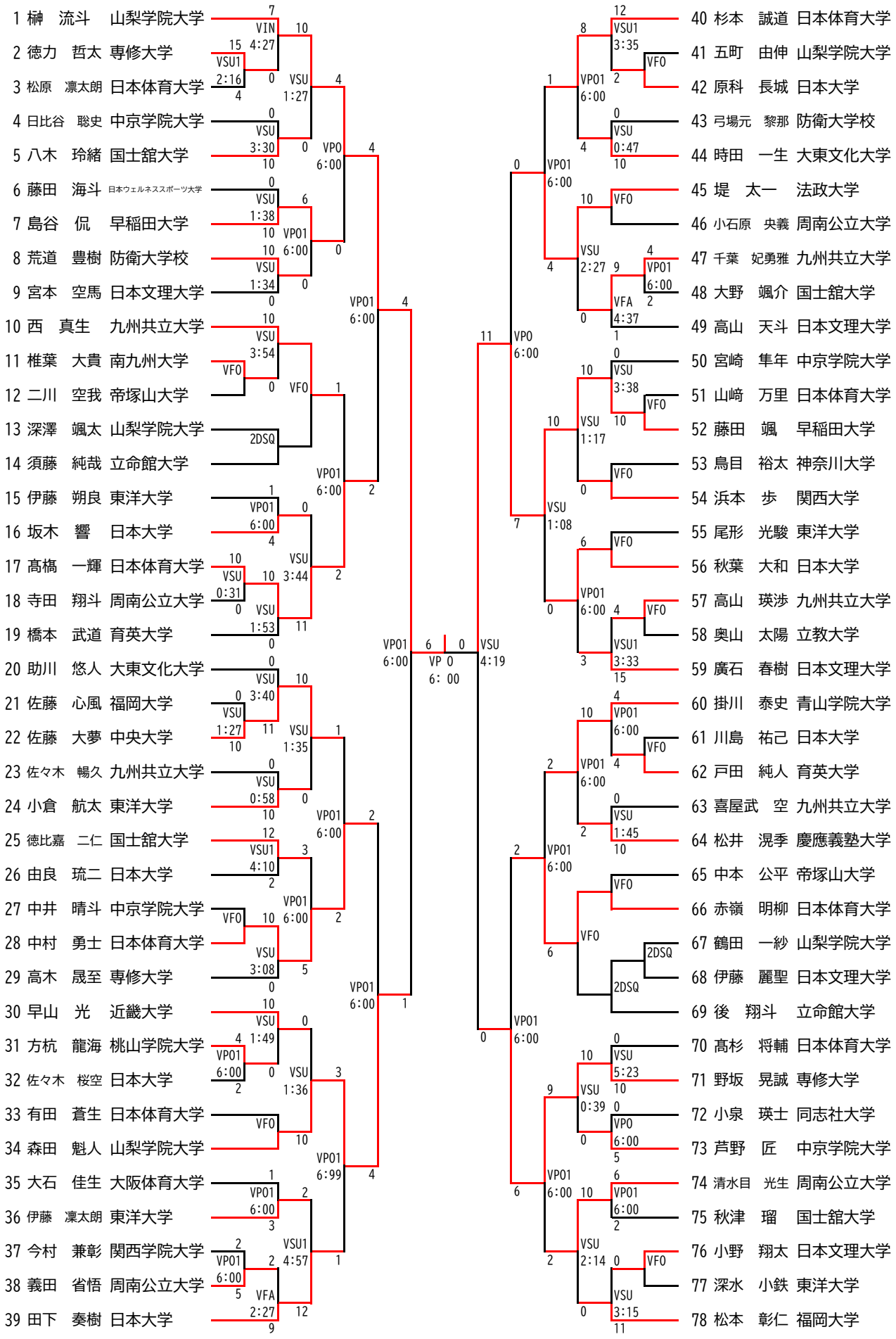Freestyle 61kg